Smith+Nephew

AETOS◊
Shoulder System

Shoulder Arthroplasty
Design Rationale

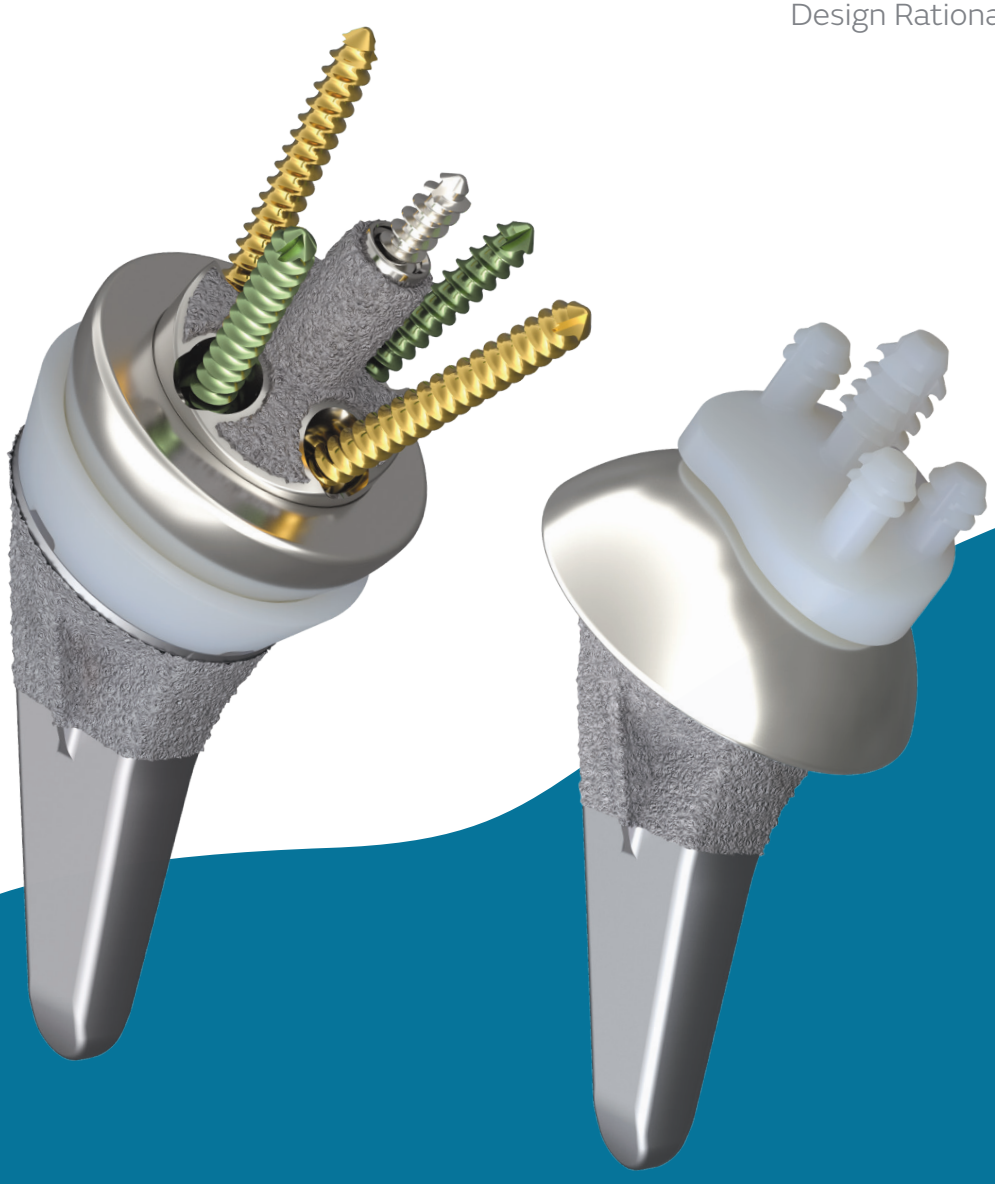

Design rationale

From experience and passion, AETOS Shoulder System is designed to be a bone preserving option for patients needing an anatomic or reverse shoulder arthroplasty.[1] Focusing on **morphological preservation**, the AETOS system maintains patient anatomy with anatomic humeral head cuts[2], and is focused on metaphyseal fixation, fit, and stability with an in-lay design[2] which can also minimize over-tensioning.[2]

The AETOS Shoulder System offers a compact yet comprehensive portfolio of solutions that allows for intraoperative flexibility[3] to elevate the surgical experience with **elegant simplicity.**[2,4,6]

System features

- Designed to maximize stability
- Compact 3 tray system designed with smart instrumentation to streamline procedures[3]
- Intraoperative convertibility from TSA to RSA

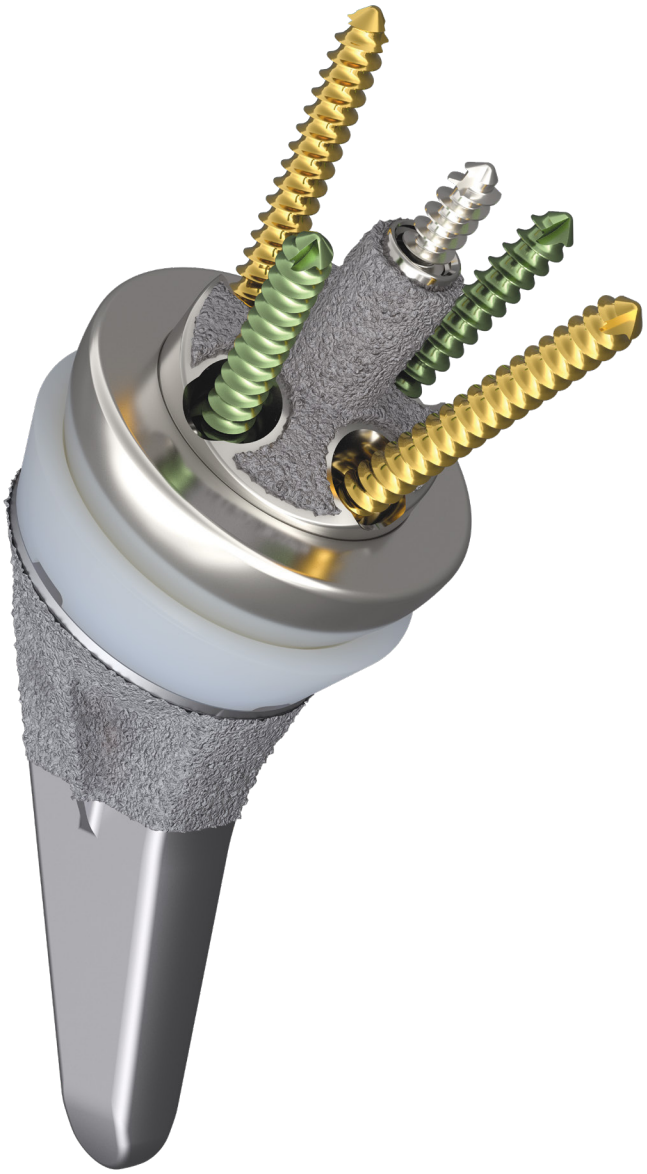

Meta Stem

The difference a shape makes

Shape

The AETOS Meta Stem is designed to provide metaphyseal fixation and stability with an in-lay collar.[2]



The large proximal tapered geometry of the in-lay collar allows for fixation.[2] The in-lay design permits soft tissue tensioning.

- Reduce risk of acromion fracture[4-7]
- Prevent deltoid fatigue[8]



Inclination

AETOS Meta Stem is designed for anatomic neck resection.

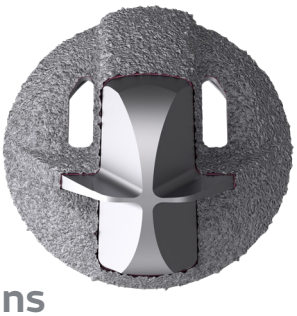

Cruciate fins

Fins allow for metaphyseal centering while respecting posterior humeral offset. The fins also provide fixation.

- Narrow, Medial/Lateral Fins are designed to provide rotational stability.[1]
- Anterior/Posterior Fins are designed to prevent varus/valgus tilt and provide initial fixation.[1]

Lateral curve

Allows surgeons to respect the greater tuberosity during insertion.

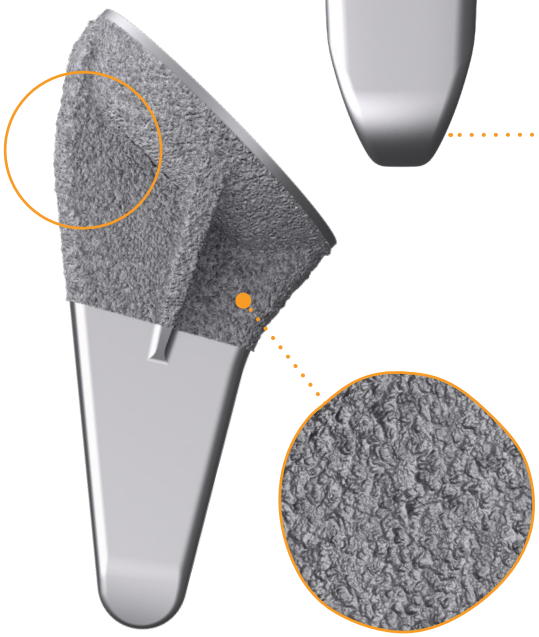

25x magnification

Taper distal portion

AETOS Meta Stem provides the flexibility for anatomic placement.

The tapered distal portion of the AETOS Meta Stem minimizes cortical contact.[2,9]

Plasma spray porous titanium coating

To encourage biological fixation[12-15*]

*Compared to an onlay design
**Compared to uncoated implants

AETOS Meta Stem

4 stem sizes to address a variety of patients

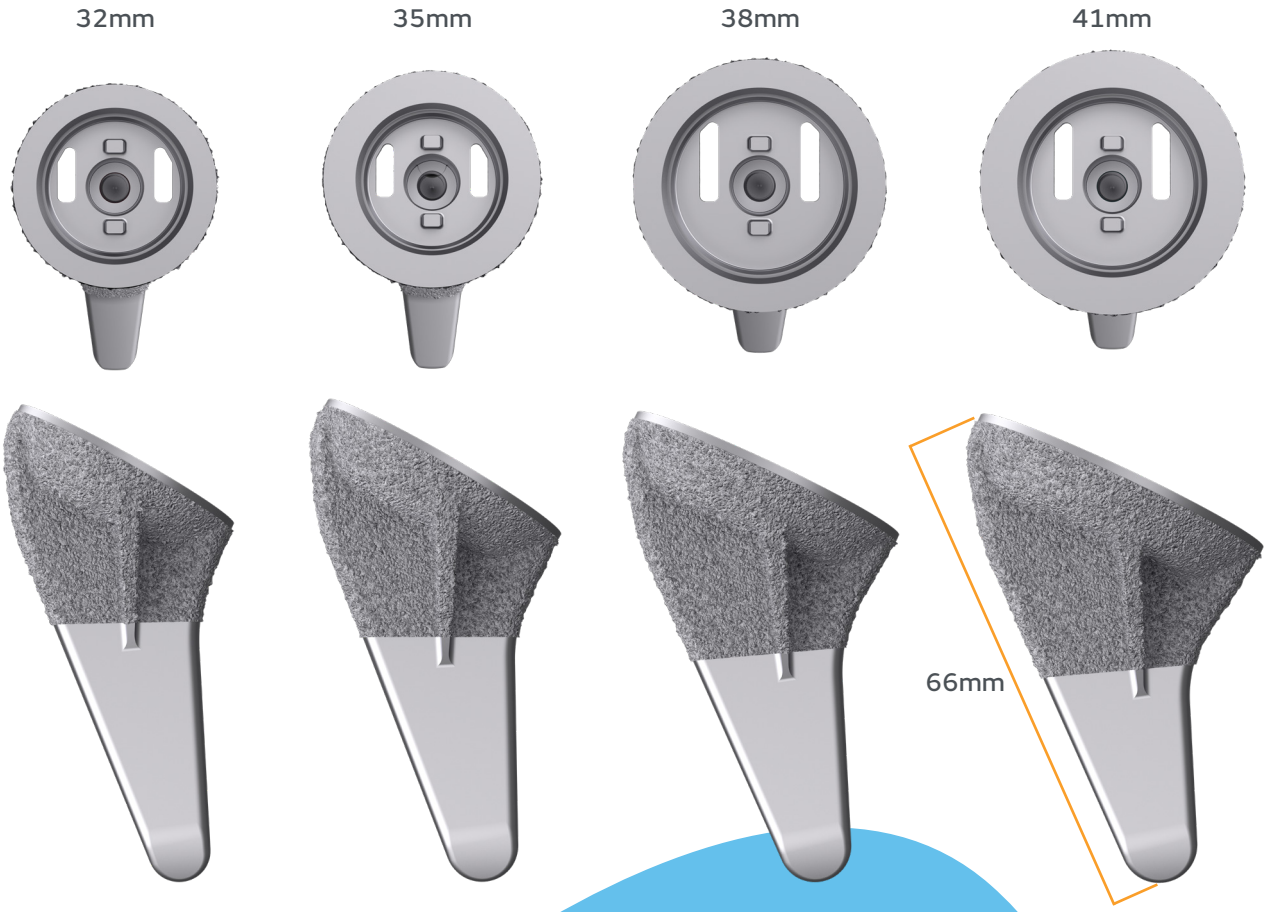

Anatomic Humeral Head

Keeping anatomics, anatomic

Only concentric humeral heads are needed to restore the humeral head placement to native anatomic position due to the Meta Stem being a metaphyseal oriented stem and placed in the center of the humeral head osteotomy.[3] Compared to traditional shoulder systems, the AETOS Shoulder System is designed to reduce the inventory footprint required in the OR and facility.[4]

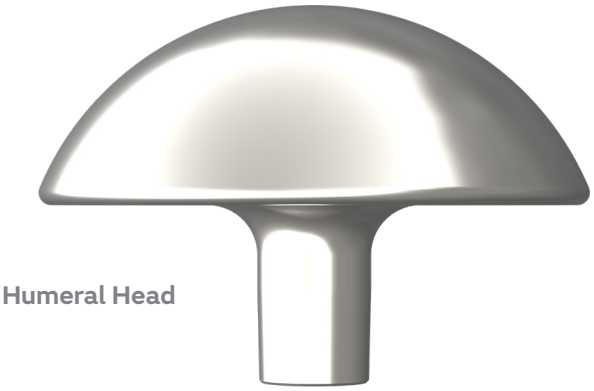

Humeral Head

AETOS Humeral Head offerings

10 Concentric Heads

Size	Width	Height	Spherical ø
38-14	38mm	14mm	41mm
41-15	41mm	15mm	44.25mm
44-16	44mm	16mm	47.50mm
44-18	44mm	18mm	45.56mm
47-16	47mm	16mm	52.16mm
47-18	47mm	18mm	49.64mm
50-18	50mm	18mm	50mm
50-21	50mm	21mm	51.32mm
53-19	53mm	19mm	57.25mm
53-22	53mm	22mm	54.51mm

Designed to properly balance soft tissue in the shoulder

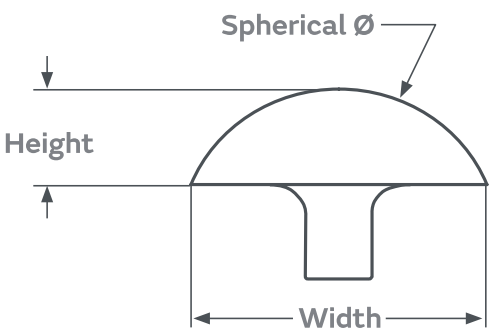

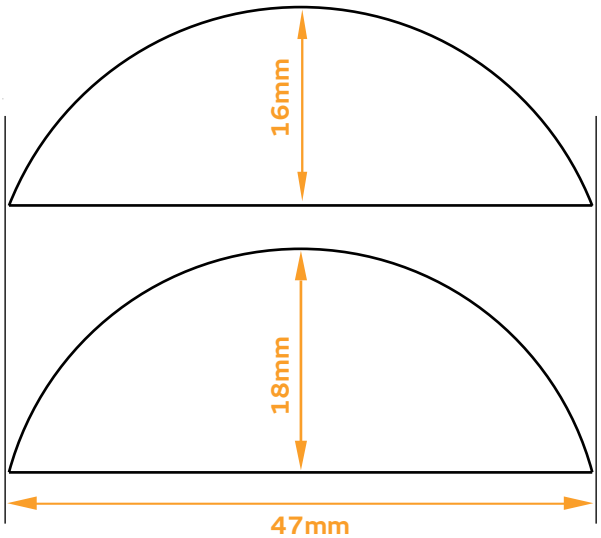

Base width same for each height

Anatomic Glenoid

AETOS Anatomic Glenoid

- 4 sizes to address a variety of patients

  Available in Standard, 5° & 10° full wedges to address varying patient bone loss.

- Oval shape with 4-pegs

  Designed to provide stability and to resist rocking horse.[10,11]

- 9 longitudinal flutes

  Designed to evenly distribute and interdigitate cement across all 4-pegs.[10]

Cross-linked Polyethelene (XLPE)

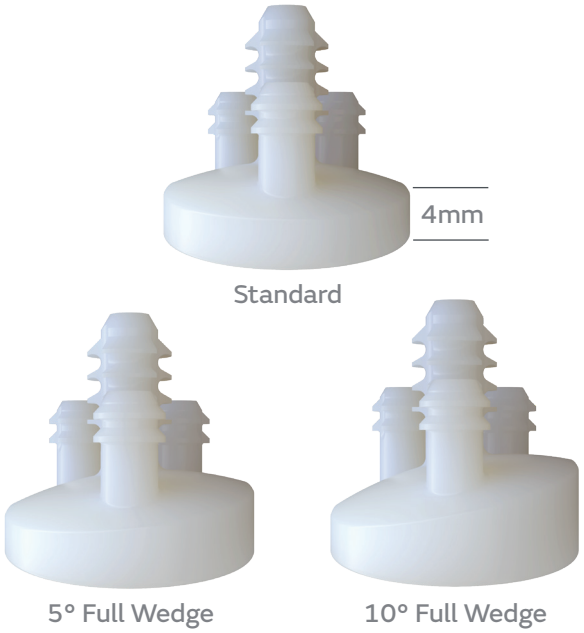

Posterior augment poly thickness specifications

Glenoid base size	5° correction	10° correction
XS	4.4mm	6.2mm
S	4.8mm	6.4mm
M	5.2mm	6.5mm
L	5.6mm	6.8mm

Reverse Liner

Reverse Glenoid Liner offerings

- Standard and Retentive options
- Thickness options: 0, +3, +6mm
- Material: Cross-linked Polyethelene (XLPE)



Reverse Poly Liner

AETOS Reverse Poly Liners' lead-in tip locks into the stem to provide stability and assists in locking the liner into the stem.

Anti-rotation tabs for rotational stability

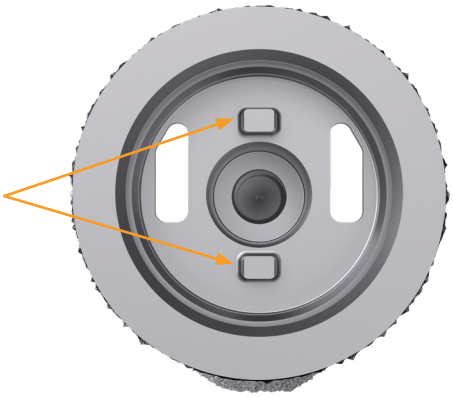

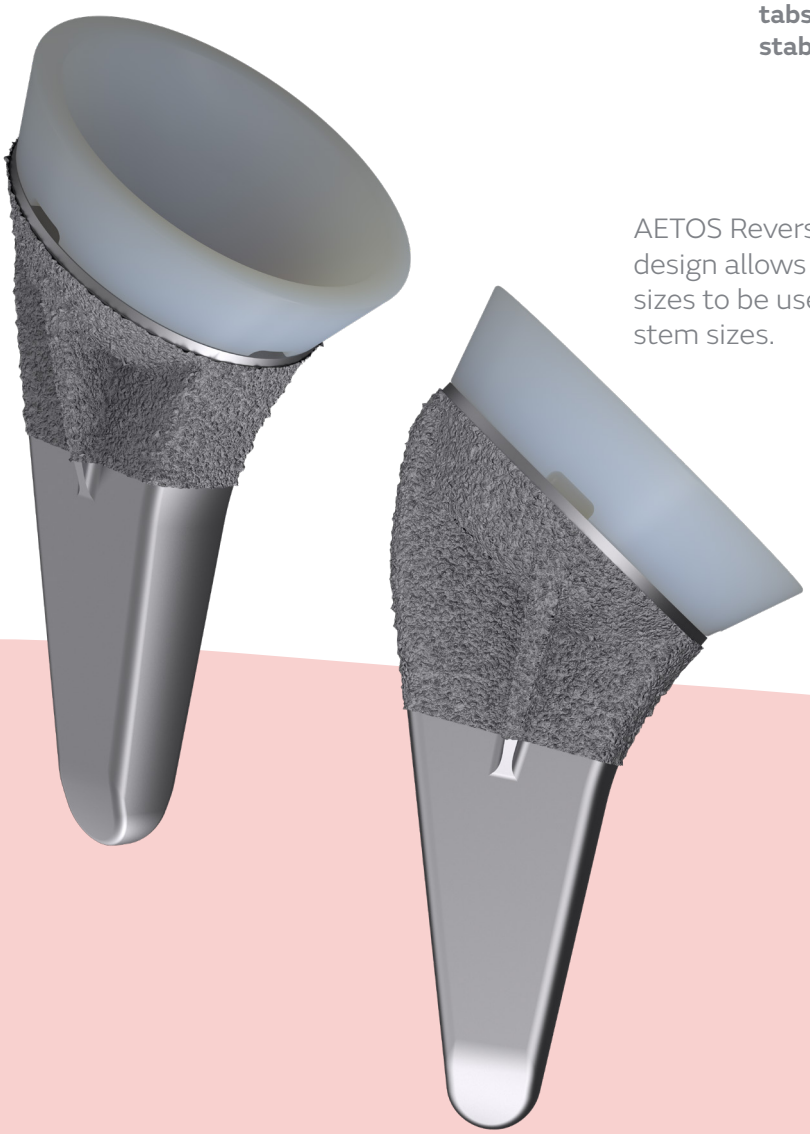

AETOS Reverse Poly Liners' design allows all glenosphere sizes to be used across all stem sizes.

A 9mm spacer can be used to properly tension the deltoid, providing additional offset of +9, +12, +15mm.

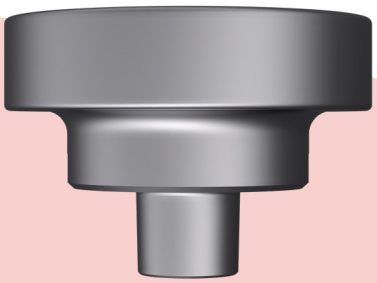

Baseplate

Shapes

Eccentric Baseplate allows for the post to be placed centrally similar to an anatomic glenoid prep.

Circular baseplate design allows for implantation flexibility.



Offerings

Centered, Eccentric
10° Full Wedge and
15° Full Wedge



Centered | Eccentric | 10° Full Wedge | 15° Full Wedge

Central Post

- 8.75mm diameter
- 15mm length



Post Extension options

- 8.25mm diameter, available in 10mm & 15mm lengths



Baseplate *continued*

Central Screw

A central screw* provides compression independent of the baseplate orientation.

- 4.5mm diameter, available in 7 lengths



Peripheral Screw options

Variable angle, 4.5mm screws in 8 lengths allows flexibility to provide the best fixation in vary bone quality with locking or compression in any baseplate peripheral hole.

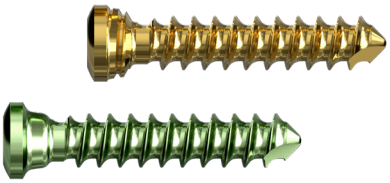

Coating

Plasma spray porous titanium designed for biologic on-growth



25x magnification

*Central screw cannot be used if post extension is used and cannot be used with eccentric baseplate

Glenosphere

Glenosphere offerings

- 3 Diameters
- 4 Soft-tissue Adjustment Offsets
- Taper and Retention Screw
- Integrated Rotation Control with insertion handle.



	Concentric	Concentric Lateralized 3mm	Eccentric 4mm	Eccentric 4mm & Lateralized 3mm
34		 *		
38				
42				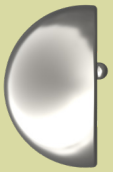

*Lateralization +1mm

Products may not be available in all markets because product availability is subject to the regulatory and/or medical practices in individual markets. Please contact your Smith+Nephew representative or distributor if you have questions about the availability of Smith+Nephew products in your area.

Smith & Nephew, Inc.
1450 Brooks Road
Memphis, Tennessee 38116
USA

www.smith-nephew.com

◊Trademark of Smith+Nephew
All Trademarks acknowledged
©2023 Smith & Nephew, Inc.
38729 V1 09/23

References

1. Harmer L, Throckmorton T, Sperling JW. Total shoulder arthroplasty: are the humeral components getting shorter? Curr Rev Musculoskelet Med. 2016;9(1):17-22. **2.** Smith+Nephew 2023. AETOS Inlay Design Features. Internal Report. ER-04-0990-0017. **3.** Smith+Nephew 2023. AETOS Instruments & Trays. Internal Report. ER-04-0990-0020. **4.** Georges Haidamous , Alexandre Lädermann, Mark A Frankle, R Allen Gorman, Patrick J Denard, JSES June 2020: The risk of postoperative scapular spine fracture following reverse shoulder arthroplasty is increased with an onlay humeral stem. **5.** Brian C. Werner, MD, R. Alexander Creighton, MD Patrick J. Denard, MD Evan Lederman, MD Anthony Romeo, MD Justin W. Griffin, MD: Prosthetic humeral head center of rotation shift from ideal is associated with inferior clinical outcomes after anatomic total shoulder arthroplasty. **6.** Teja S. Polisetty, Aaron M. Baessler, MD, Jonathan C. Levy, MD, and Brian L. Badman, MD. JSES Nov. 2021 Onlay versus inlay reverse total shoulder arthroplasty: a retrospective comparison of radiographic and clinical outcomes. **7.** Ryan LeDuc, BS Dane H. Salazar, MD Nickolas G. Garbis, MD, Jun2019: Incidence of post-operative acromial fractures with onlay vs inlay reverse shoulder arthroplasty. **8.** Luc Favard, Christophe Levigne, Cécile Nerot, Christian Gerber, Lieven De Wilde, Daniel Mole, JSES 2011: Reverse prostheses in arthropathies with cuff tear: are survivorship and function maintained over time? **9.** Smith+Nephew 2023. AETOS Anatomic Humeral Head Design. Internal Report. ER-04-0990-0019. **10.** Smith+Nephew 2023. AETOS Glenoid Interdigitation Feature. Internal Report. ER-04-0990-0018. **11.** Integra 2022. Aetos Anatomic Glenoid Loosening Report. Internal Report. ER-04-0990-0013 REV AA. **12.** Carpenter SR, Urits I, Murthi AM. Porous metals and alternate bearing surfaces in shoulder arthroplasty. Curr Rev Musculoskelet Med. 2016;9(1):59-66. **13.** Godenèche A, Garret J, Barth J, Michelet A, Geais L. Comparison of revision rates and radiographic observations of long and short, uncoated and coated humeral stem designs in total shoulder arthroplasty. EFORT Open Rev. 2019;4(2):70-76. **14.** Morwood MP, Johnston PS, Garrigues GE. Proximal ingrowth coating decreases risk of loosening following uncemented shoulder arthroplasty using mini-stem humeral components and lesser tuberosity osteotomy. J Shoulder Elbow Surg. 2017;26(7):1246-1252. **15.** Dr Hans Schmotzer SU. Osseointegration Different surface textures and coatings of cementless orthopaedic implants. In: PI Precision Implants AG Aarau, Switzerland2000.